INFORMACIÓN TÉCNICA

Para asegurar el cumplimiento de la REBT y la norma UNE-EN- 60670 se deben instalar los productos según las presentes instrucciones. MMCONECTA no se responsabilizará en caso que estas condiciones no sean aceptadas.

TECHNICAL INFORMATION

To ensure the UNE-EN- 60670 regulation it is neccesary to install the products following these assembly instructions. MMCONECTA will not be responsable in case of these conditions are not accomplished.

mmconecta

Camino de Torrejón, 14 · 28864 Ajalvir - Madrid
T +34 91 887 40 87 - F +34 91 884 35 80
info@mmconecta.com - www.mmconecta.com

mmconecta

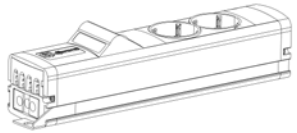

Basic

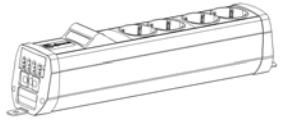

One

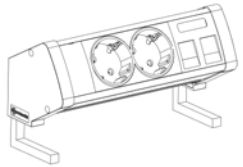

Over Mini

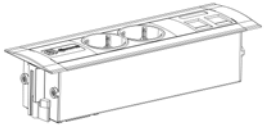

Inside

Roller

Access

CM80

Instrucciones de montaje
Assembly instructions

EASYBLOCK

mmconecta

Basic	One	Over Mini	Inside	Roller	Access	CM80

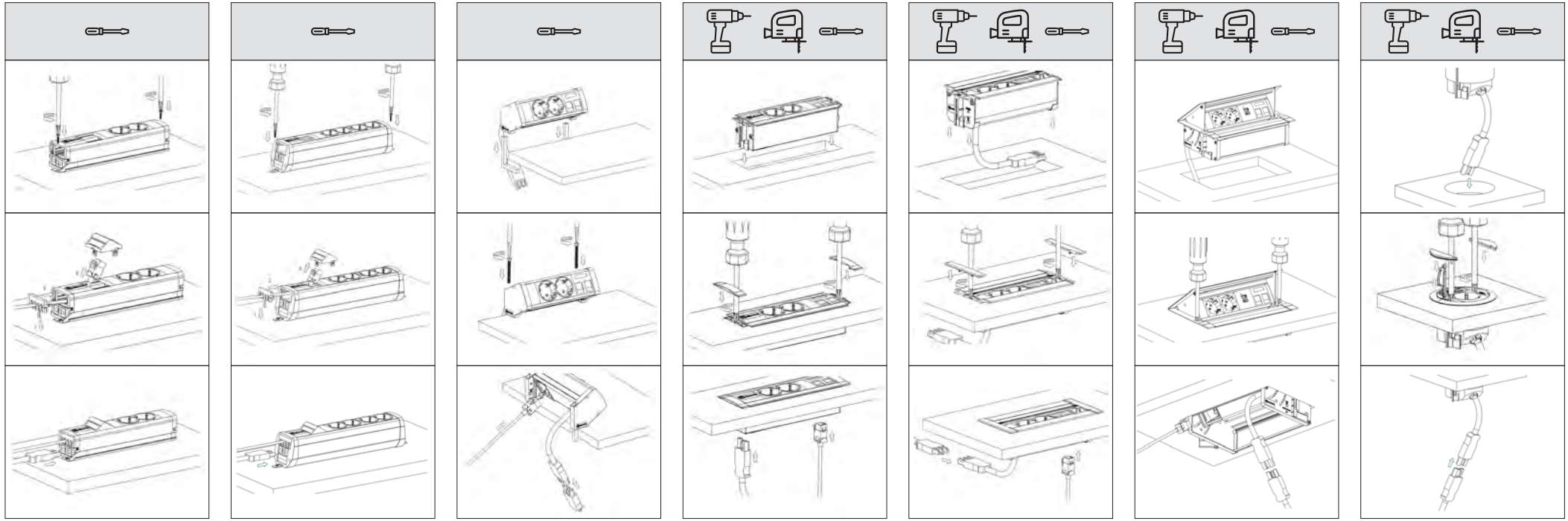

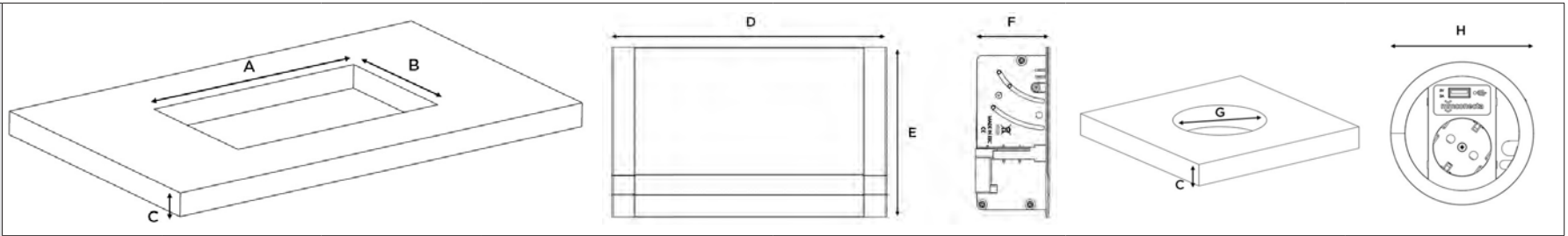

Número de módulos útiles. Number of useful modules.	Essential (D, E, F) mm	Depth (D, E, F) mm	Overdesk (C, D, E, F) mm	Indesk (A, B, C) (D, E, F) mm	Spinner (A, B, C) (D, E, F) mm	Cover (A, B, C) (D, E, F) mm	Round (C, G Ø, H Ø) mm
1	(183, 55, 52)	(201, 68, 73)	(18-60, 114, 79, 79)	(116, 56, 9-35) (124, 55, 58)	(147, 81, 10-40) (155, 100, 65)	(135, 145, 15-28) (144, 159, 68)	(12-45, 80-90 , 95)
2	(228, 55, 52)	(246, 68, 73)	(18-60, 159, 79, 79)	(161, 56, 9-35) (169, 55, 58)	(192, 81, 10-40) (200, 100, 65)	(180, 145, 15-28) (189, 159, 68)	
3	(273, 55, 52)	(291, 68, 73)	(18-60, 204, 79,79)	(206, 56, 9-35) (214, 55, 58)	(237, 81, 10-40) (245, 100, 65)	(225, 145, 15-28) (234, 159, 68)	
4	(318, 55, 52)	(336, 68, 73)	(18-60, 249, 79, 79)	(251, 56, 9-35) (259, 55, 58)	(282, 81, 10-40) (290, 100, 65)	(270, 145, 15-28) (279, 159, 68)	
5	(363, 55, 52)	(381, 68, 73)	(18-60, 294, 79, 79)	(296, 56, 9-35) (304, 55, 58)	(327, 81, 10-40) (335, 100, 65)	(315, 145, 15-28) (324, 159, 68)	
6	(408, 55, 52)	(426, 68, 73)	(18-60, 339, 79, 79)	(341, 56, 9-35) (349, 55, 58)	(372, 81, 10-40) (380, 100, 65)	(360, 145, 15-28) (369, 159, 68)	
7	(453, 55, 52)	(471, 68, 73)	(18-60, 384, 79, 79)	(386, 56, 9-35) (394, 55, 58)	(417, 81, 10-40) (425, 100, 65)	(405, 145, 15-28) (414, 159, 68)	
8	(498, 55, 52)	(516, 68, 73)	(18-60, 429, 79, 79)	(431, 56, 9-35) (439, 55, 58)	(462, 81, 10-40) (470, 100, 65)	(450, 145, 15-28) (459, 159, 68)	

100-240V~ 50/60Hz (±10%)	**10,0W Max.** Type-A: 5,0V⎓ 2,0A	Low load efficiency (10%): 81,42% (1)	Average active efficiency: 80,37% (2)	Standby <0,19W (3)
100-240V~ 50/60Hz (±10%)	**10,5 W Max.** Type-C: 5,0V⎓ 2,1A	Low load efficiency (10%): 74,2% (1)	Average active efficiency: 78,0% (2)	Standby <0,20W (3)

100-240V~ 50/60Hz (±10%)	**21,0W Max.** Total: 5,0V⎓ 4,2A Type-A: 5,0V⎓ 2,1A Type-C: 5,0V⎓ 3,01A	Low load efficiency (10%): 82,0% (1)	Average active efficiency: 84,5% (2)	Standby <0,1W (3)
100-240V~ 50/60Hz (±10%)	**30,0W Max.** Total: 5,0V⎓ 6,0A Type-A: 5,0V⎓ 3,0A Type-C: 5,0V⎓ 3,0A	Low load efficiency (10%): 80,4% (1)	Average active efficiency: 85,6% (2)	Standby <0,1W (3)

(1) Eficiencia a carga baja / Efficiency at low load

(2) Eficiencia activa promedio / Average active efficiency

(3) Reposo / Standby